SPECIFICATIONS	
WEIGHT	420 LBS (191 KG)
ELECTRICAL	100-240VAC SINGLE PHASE, 50/60 Hz POWER CONSUMPTION: 600W MAX
AIR FEED	5 CFM/80 PSI OF CLEAN, DRY AIR
PASS-THROUGH	UP TO 5 INCHES (127 mm)
BAG THICKNESS	1.09 - 4.0 MIL
BAG SIZES	WIDTH: 2 to 12 INCHES (50.8 TO 304.8 mm) / LENGTH: 5 to 20 INCHES (127 TO 508 mm)
WEIGHT CAPACITY	UP TO 5 LBS (0.5 KG) (WITH LOAD SHELF)

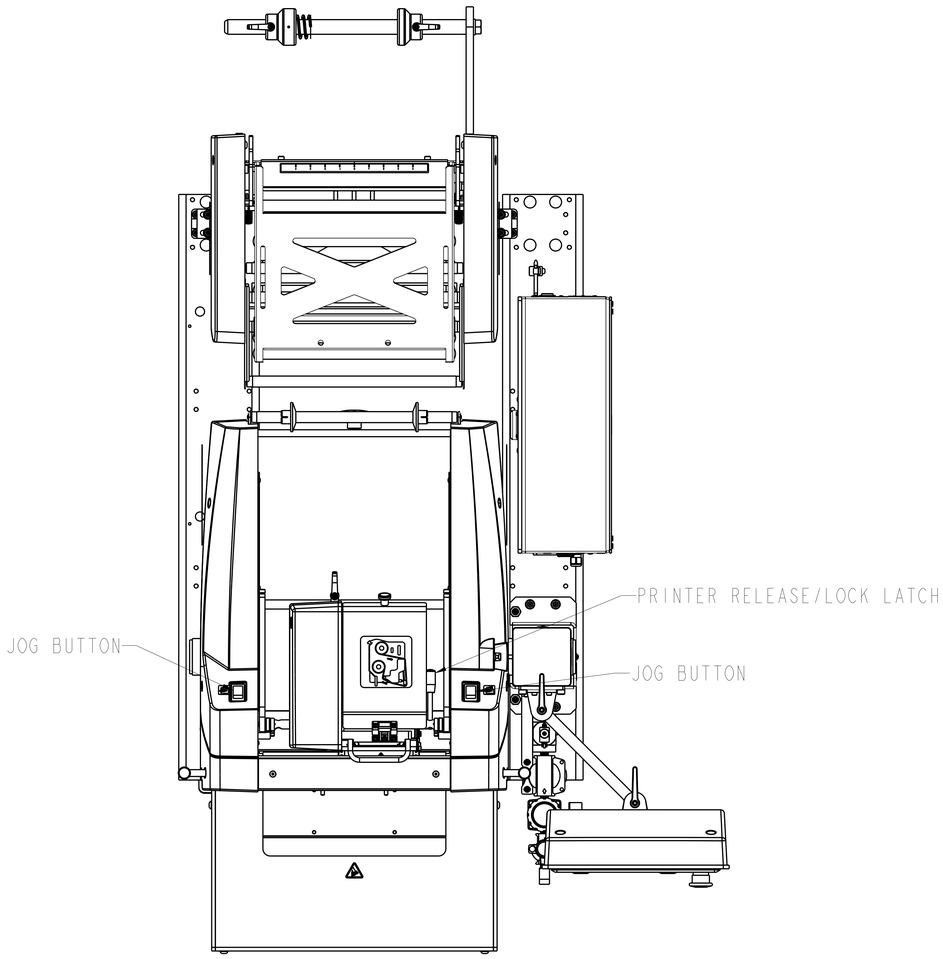

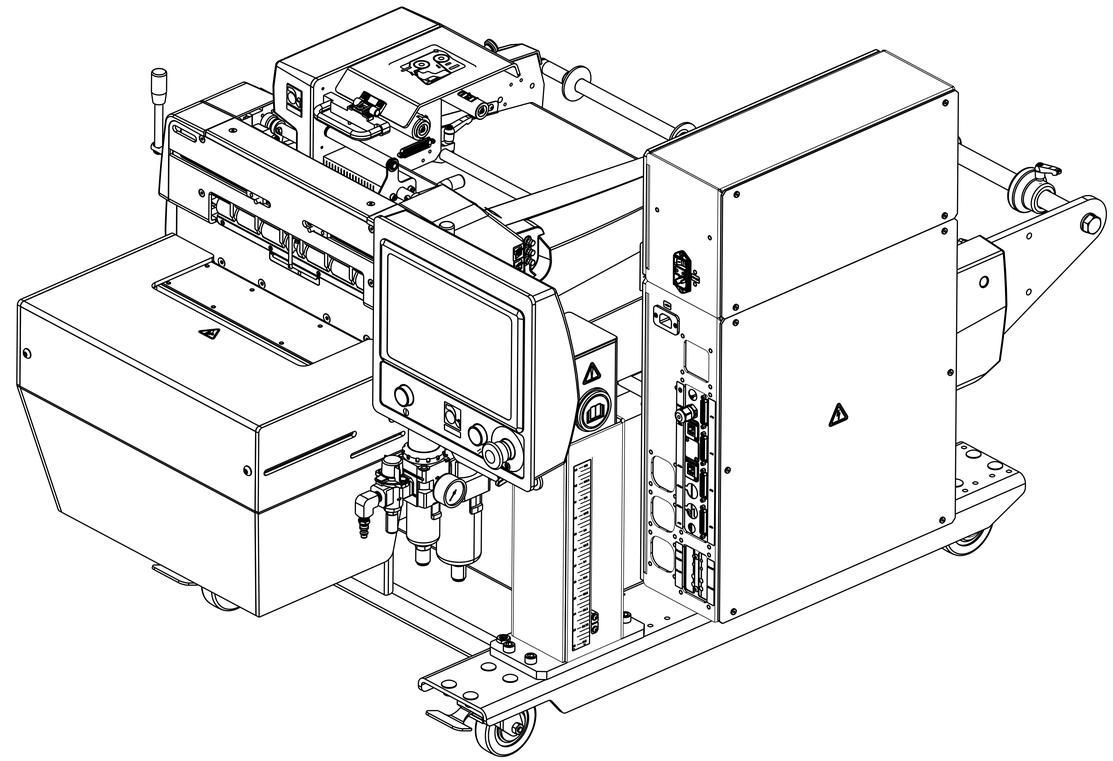

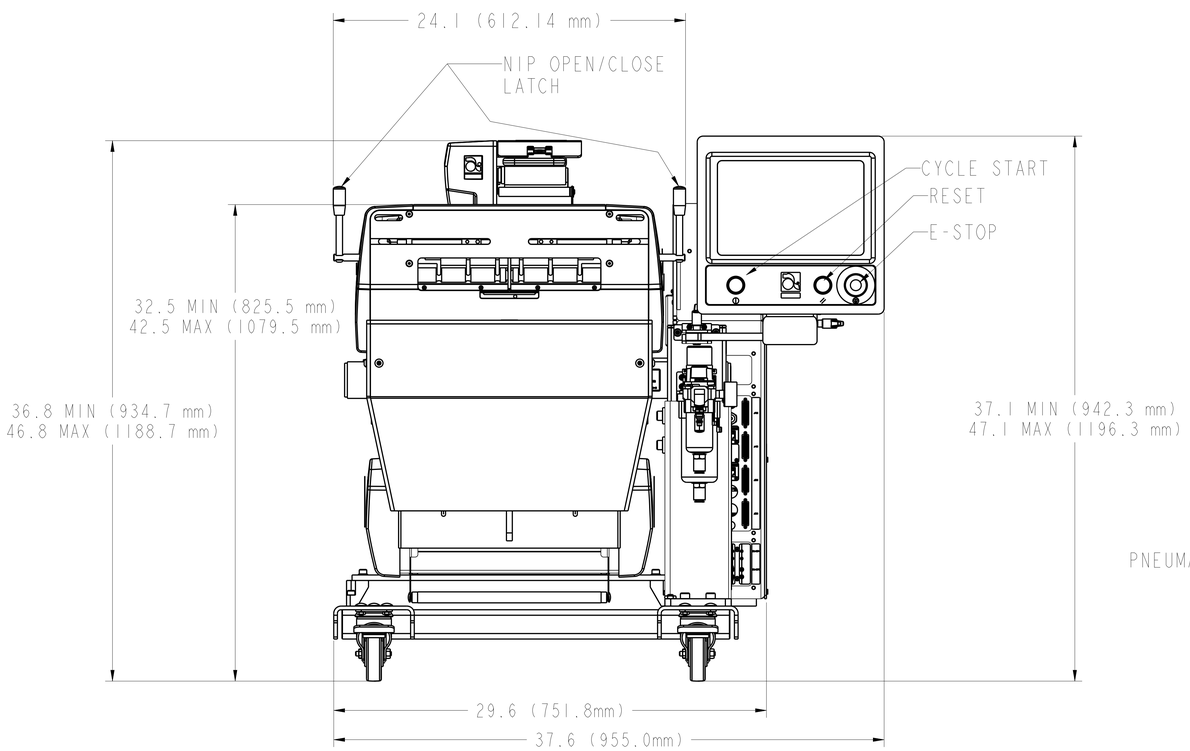

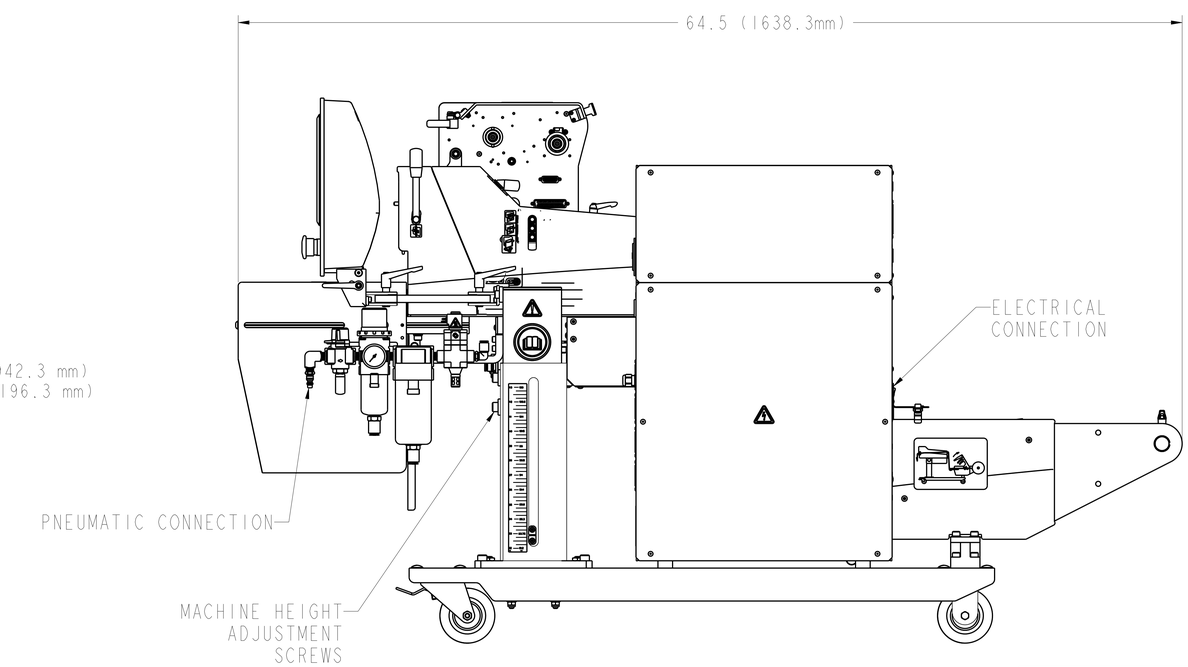

REV	BY	DATE	ECN	DESCRIPTION
C	DMF	8-15-22		UPDATED WEIGHT AND CONSUMPTION SPECS.
B	AZ	1-22-20		EDIT TO METRIC
A	DMF	10-4-16	463	RELEASED

FINISH: NONE

MATERIAL:

MACHINE SURFACES TO BE NO GREATER THAN 125 (3.2) UNLESS OTHERWISE NOTED
PART MUST BE FREE OF BURRS AND SHARP EDGES

TOLERANCE	INCHES	mm
1 PLACE DIMS	± .1	±2.5
2 PLACE DIMS	± .02	±0.51
3 PLACE DIMS	± .005	±0.10
ANGULAR	± 1/2°	

NOTICE: THIS DOCUMENT CONTAINS PROPRIETARY INFORMATION AND IT SHALL NOT BE USED OR REPRODUCED OR ITS CONTENT DISCLOSED, IN WHOLE OR PART, WITHOUT THE PRIOR WRITTEN CONSENT OF AUTOMATED PACKAGING SYSTEMS INC.

Vaulted

INCH [MM] THIRD ANGLE PROJECTION

Automated PACKAGING SYSTEMS
10175 PHILIPP PARKWAY - STREETSBORO, OH 44241

DRAWING SIZE	SCALE	DRAWN BY	DOM REFERENCE NUMBER
E	1/4	NAME: DMF DATE: 10-4-16	

TITLE: FOOTPRINT, AB 550

DRAWING NO. FP230 — SHEET 1 OF 1 — REV. C

Fabricated & Documented to be RoHS Compliant